AERIAL IMAGE

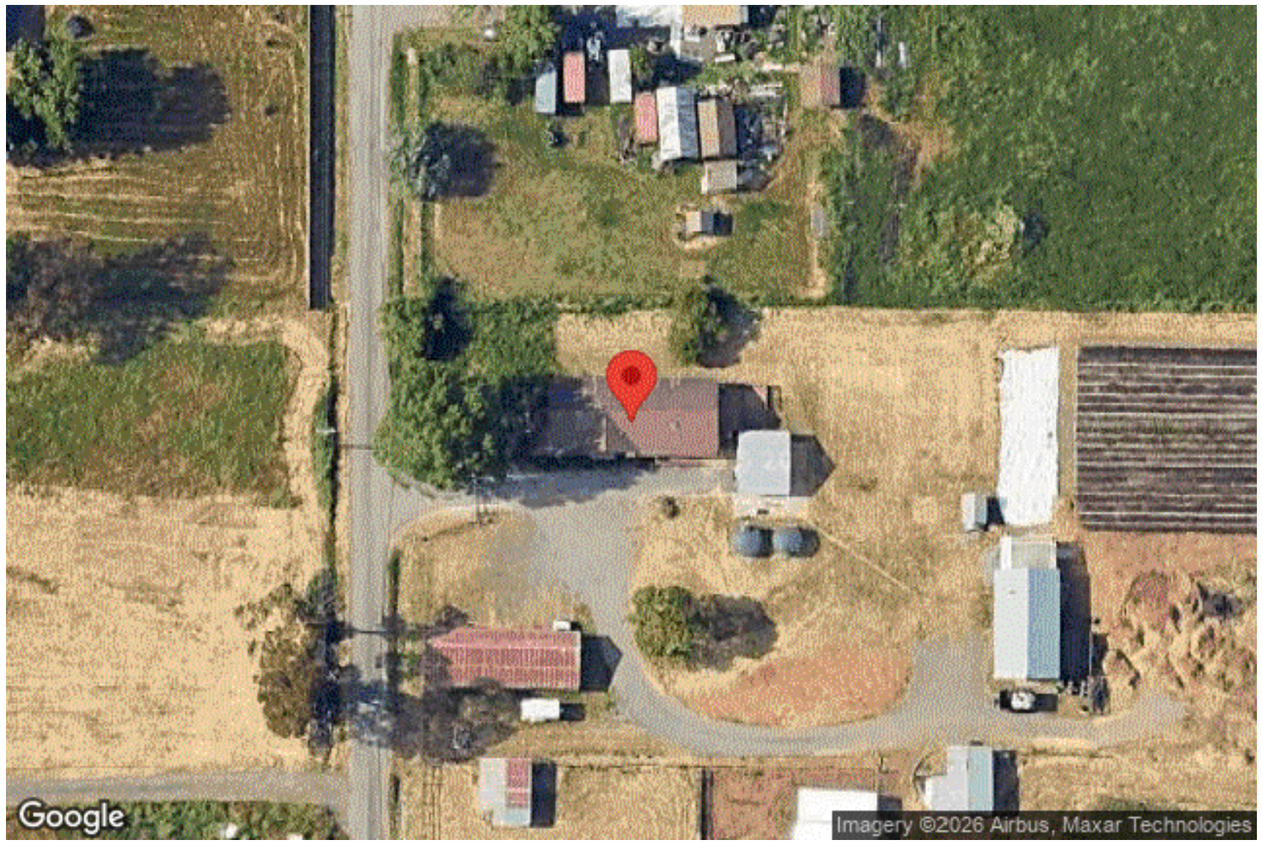

GENERAL NOTES

1. THIS PROJECT INVOLVES THE INSTALLATION OF A GRID-INTERACTIVE PV SYSTEM. PV MODULES WILL BE MOUNTED USING A PRE-ENGINEERED MOUNTING SYSTEM. THE MODULES WILL BE ELECTRICALLY CONNECTED TO THE LOCAL UTILITY USING MEANS AND METHODS CONSISTENT WITH THE RULES ENFORCED BY THE LOCAL UTILITY AND AUTHORITY HAVING JURISDICTION.
2. THIS DOCUMENT HAS BEEN PREPARED TO DESCRIBE THE DESIGN OF A PROPOSED PV SYSTEM WITH ENOUGH DETAIL TO DEMONSTRATE COMPLIANCE WITH APPLICABLE CODES AND REGULATIONS. THE DOCUMENT SHALL NOT BE RELIED UPON AS A SUBSTITUTE FOR FOLLOWING MANUFACTURER INSTALLATION INSTRUCTIONS. THE SYSTEM SHALL COMPLY WITH ALL MANUFACTURER INSTALLATION INSTRUCTIONS, AS WELL AS ALL APPLICABLE CODES. NOTHING IN THIS DOCUMENT SHALL BE INTERPRETED IN A WAY THAT OVERRIDES THEM. THE CONTRACTOR IS RESPONSIBLE FOR VERIFICATION OF ALL DETAILS IN THIS DOCUMENT.
3. THIS DOCUMENT IS BASED ON FIELD INSPECTIONS AND OTHER INFORMATION AVAILABLE AT THE TIME. ACTUAL FIELD CONDITIONS MAY VARY AND REQUIRE MODIFICATIONS IN CONSTRUCTION DETAILS.
4. THE DIMENSIONS AND MEASUREMENTS SHOWN IN THIS DOCUMENT ARE BASED ON AERIAL IMAGERY AND OTHER AVAILABLE INFORMATION, AND ARE TO BE TREATED AS APPROXIMATED TO SHOW A GENERAL IDEA OF EQUIPMENT LOCATION AND PROPERTY SIZE.
5. ANY CHANGES TO THIS DESIGN AT THE TIME OF INSTALLATION DUE TO FIELD CONDITIONS MUST BE REPORTED TO THE DESIGNER AND AHJ.

SCOPE OF WORK

INSTALLATION OF ROOF-MOUNTED UTILITY INTERACTIVE PV SYSTEM
16.20 KW DC & 12.56 KW AC

PV MODULES - 36 CERTAINTEED CTTC450HC12-08
INVERTER(S) - 36 ENPHASE IQ8AC-72-M-US

ROOF TYPE - COMPOSITE FLAT TILE
RACKING - IRONRIDGE XR100 & XR1000
ATTACHMENT - IRONRIDGE FLASHFOOT 2

APPLICABLE CODES & STANDARDS

GOVERNING CODES

1. ALL WORK SHALL COMPLY WITH:
   - 1.1 2025 CALIFORNIA ELECTRICAL CODE
   - 1.2 2025 CALIFORNIA RESIDENTIAL CODE
   - 1.3 2025 CALIFORNIA FIRE CODE
   - 1.4 2025 CALIFORNIA RESIDENTIAL CODE
   - 1.5 2025 CALIFORNIA EXISTING BUILDING CODE
   - 1.6 AND ALL OTHER STATE AND LOCAL AMENDMENTS TO BUILDING AND ELECTRICAL CODES

STRUCTURAL CRITERIA

1. WIND EXPOSURE CATEGORY: C
2. WIND SPEED: 110.0 MPH
3. GROUND SNOW LOAD: 0.0 PSF

ELECTRICAL NOTES

1. ALL EQUIPMENT TO BE LISTED BY UL OR OTHER NRTL, AND LABELED FOR ITS APPLICATION
2. ALL RACEWAYS ON ROOFTOPS SHALL BE PLACED MORE THAN 7/8" ABOVE THE ROOFTOP. ALL CONDUCTORS SHALL BE COPPER, RATED FOR 600V AND 90°C WET ENVIRONMENT
3. WIRING, CONDUIT, AND RACEWAYS MOUNTED ON ROOFTOPS SHALL BE ROUTED DIRECTLY TO, AND LOCATED AS CLOSE AS POSSIBLE TO THE NEAREST RIDGE, HIP, OR VALLEY
4. WORKING CLEARANCES AROUND ALL NEW AND EXISTING ELECTRICAL EQUIPMENT SHALL COMPLY WITH NEC 110.26
5. DRAWINGS INDICATE THE GENERAL ARRANGEMENT OF SYSTEMS
6. CONTRACTOR SHALL FURNISH ALL NECESSARY OUTLETS, SUPPORTS, FITTINGS, AND ACCESSORIES TO FULFILL APPLICABLE CODES AND STANDARDS
7. WHERE SIZES OF JUNCTION BOXES, RACEWAYS, AND CONDUCTORS ARE NOT SPECIFIED, THE CONTRACTOR SHALL SIZE THEM ACCORDINGLY
8. ARRAY GROUNDING TO BE INSTALLED PER RACKING MANUFACTURER'S INSTRUCTION
9. ARRAY RACKING TO BE BONDED WITH CONTINUOUS COPPER E.G.C. VIA WEEB LUG OR ILSCO GBL-4DBT LAY-IN LUG
10. THE POLARITY OF THE GROUNDED CONDUCTORS IS NEGATIVE.

RUACH ELECTRIC LLC
2537 N VILLAGE DR
SANTA ROSA,CA 95403

METER # - 1050157002

UTIL - PACIFIC GAS AND ELECTRIC
AHJ - ROHNERT PARK (CITY)
OCCUPANCY - II
CONSTRUCTION - SFR
ZONING - RESIDENTIAL

SHEET INDEX

PV-1 COVER PAGE
PV-2 SITE PLAN
PV-3 ATTACHMENT DETAILS
PV-4 THREE LINE DIAGRAM
PV-5 ELECTRICAL LABELS
PV-6+ SPEC SHEETS

SCALE: NTS | DATE: 10/13/2026

DRAWN BY: RIGHT ANGLE ENGINEERING

FEDERATED INDIANS OF GRATON RANCHERIA
4528 LANGNER AVE
SANTA ROSA,CA 95407

SHEET NAME: COVER PAGE | SHEET NUMBER: PV-1

SYSTEM RATING
16.2 DC KW
12.564 AC KW

ROOF INFORMATION

ROOF SECTION	PANEL COUNT	ROOF TILT	AZIMUTH
1	17	26	180
2	3	26	180
3	1	26	270
4	15	26	0

ARRAY INFORMATION	
TOTAL ROOF AREA *(SQFT)*	2401
MODULE AREA *(SQFT)*	21.04
TOTAL ARRAY AREA *(SQFT)*	757.44
TOTAL ARRAY COVERAGE *(%)*	31.55%

SITE INDEX	
▬	IRONRIDGE XR100 (MAX 48.0" SPAN)
●	IRONRIDGE FLASHFOOT 2 MOUNTING POINT (MAX 48.0" SPACING)
▯	(36) CERTAINTEED CTTC450HC12-08 WITH ENPHASE IQ8AC-72-M-US MICRO-INVERTERS UNDERNEATH
⁘	FIRE SETBACKS

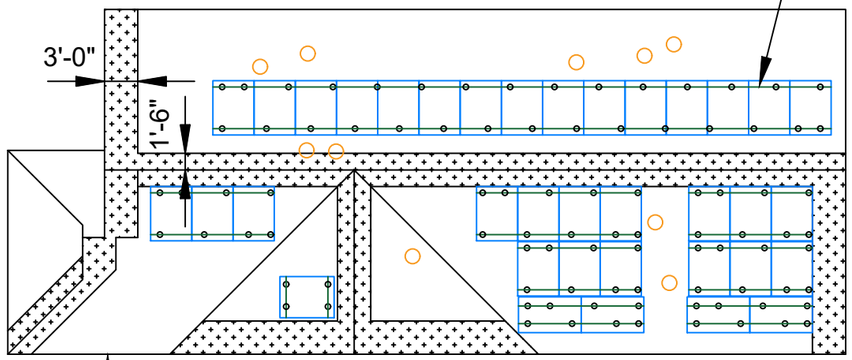

LANGNER AVE

(E) UTILITY METER
(E) MAIN SERVICE PANEL

N

RUACH ELECTRIC LLC
2537 N VILLAGE DR
SANTA ROSA,CA 95403

METER # - 1050157002

SCALE: 1" = 13.678' | DATE: 10/13/2026

DRAWN BY: RIGHT ANGLE ENGINEERING

FEDERATED INDIANS OF GRATON RANCHERIA
4528 LANGNER AVE
SANTA ROSA,CA 95407

SHEET NAME	SHEET NUMBER
SITE PLAN	PV-2

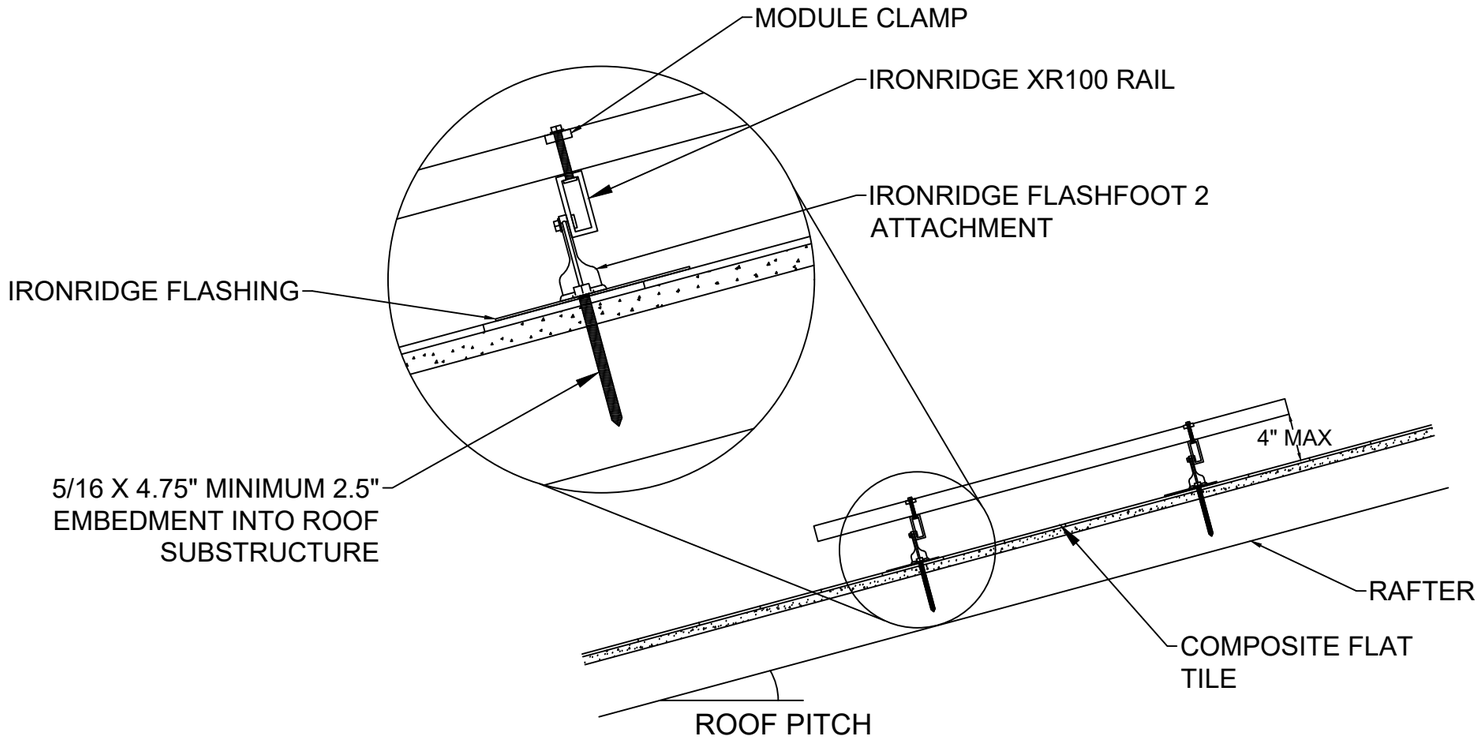

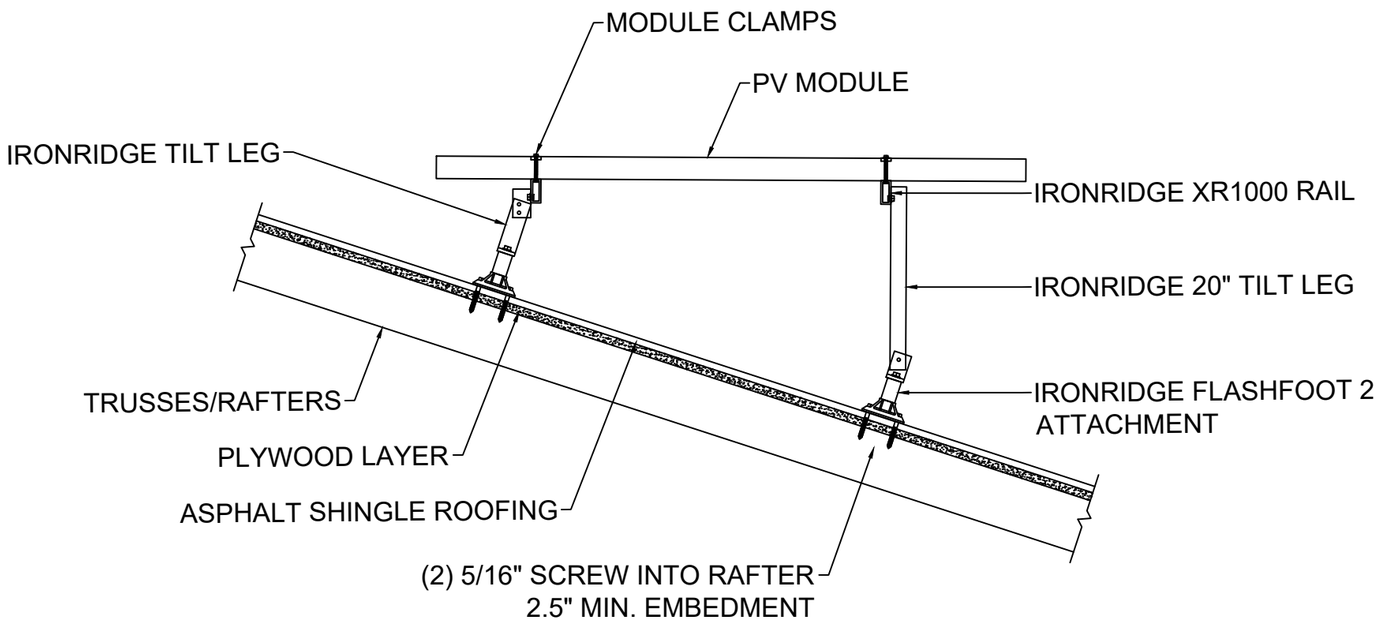

RUACH ELECTRIC LLC
2537 N VILLAGE DR
SANTA ROSA,CA 95403

METER # - 1050157002

RACKING & STRUCTURAL INFORMATION

RACKING - IRONRIDGE XR100 & XR1000
ATTACHMENT - IRONRIDGE FLASHFOOT 2
ROOF TYPE - COMPOSITE FLAT TILE

SCALE: NTS	DATE: 10/13/2026
DRAWN BY: RIGHT ANGLE ENGINEERING	

FEDERATED INDIANS OF GRATON RANCHERIA
4528 LANGNER AVE
SANTA ROSA,CA 95407

SHEET NAME	SHEET NUMBER
ATTACHMENT DETAILS	PV-3

WIRE LEGEND

- PV ARRAY L1
- PV ARRAY L2
- NEUTRAL CONDUCTOR
- EGC & GEC

NOTE: BUSBAR OVERLOAD CONTROL FEATURE TO BE UTILIZED FIELD LABEL TO BE AT THE POINT OF INTERCONNECTION: "PCS: CONTROLLED CURRENT SETTING: 160A"

THE MAXIMUM OUTPUT CURRENT FROM THIS SYSTEM TOWARDS THE MAIN PANEL IS CONTROLLED ELECTRONICALLY. REFER TO MANUFACTURERS DOCUMENTATION FOR MORE INFORMATION. THE SETTING FOR THE EMS CURRENT LIMITING FEATURE SHALL NOT BE BYPASSED [CEC 705.13]

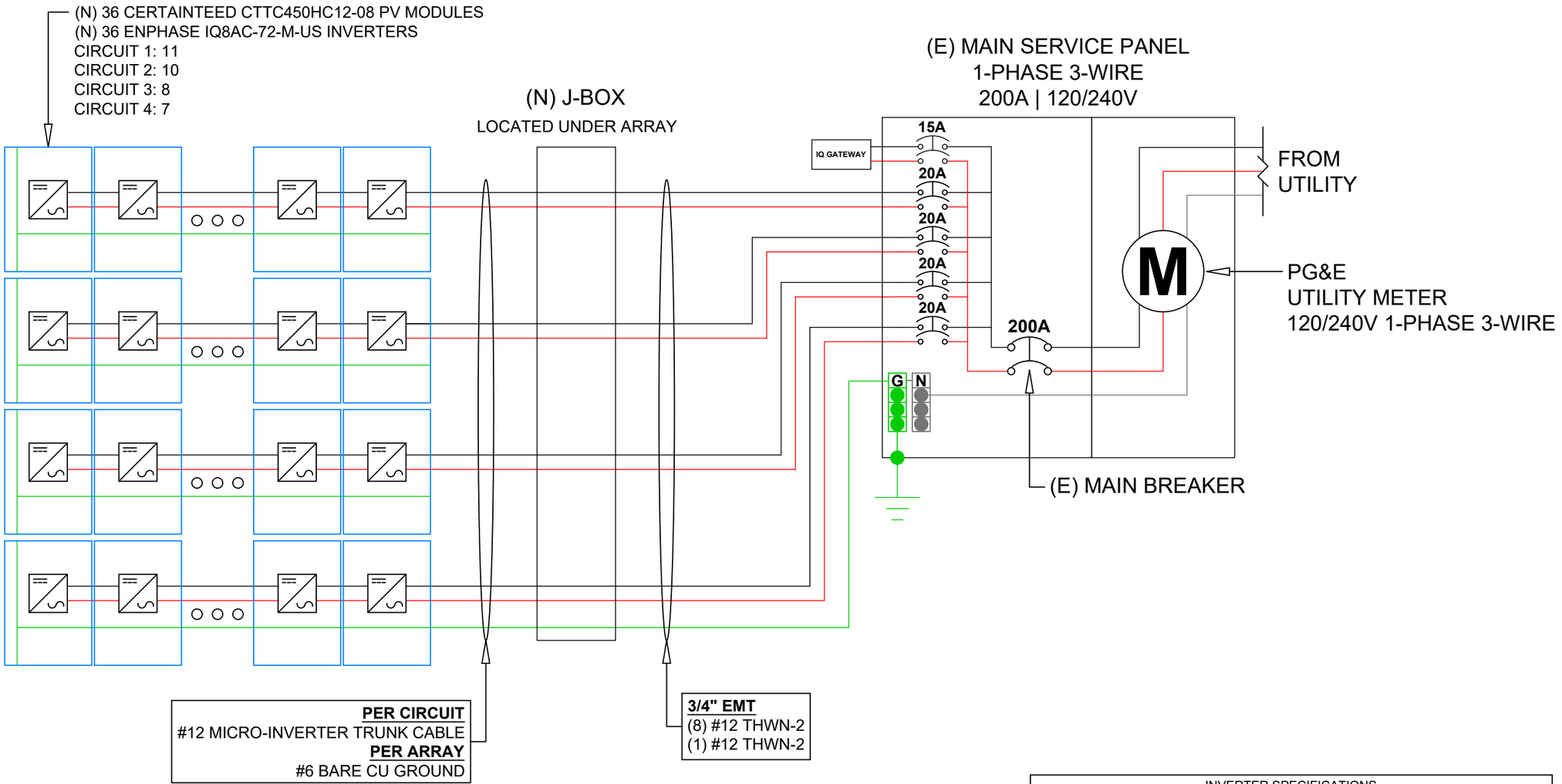

SYSTEM RATING
16.2 DC KW
12.564 AC KW

INVERTER SPECIFICATIONS	
MANUFACTURER/MODEL	ENPHASE IQ8AC-72-M-US
MAX INPUT DC POWER (WDC)	N/A
MAX OUTPUT AC POWER (WAC)	349
NOMINAL OUTPUT VOLTAGE (VAC)	240.0
MAX INPUT VOLTAGE (VDC)	60.0
MAX OUTPUT CURRENT (AAC)	1.45
MAX INPUT CURRENT (ADC)	14.0
OUTPUT COMPATIBILITY	1-PHASE 3-WIRE

RUACH ELECTRIC LLC
2537 N VILLAGE DR
SANTA ROSA,CA 95403

METER # - 1050157002

SCALE: NTS | DATE: 10/13/2026

DRAWN BY: RIGHT ANGLE ENGINEERING

FEDERATED INDIANS OF GRATON RANCHERIA
4528 LANGNER AVE
SANTA ROSA,CA 95407

SHEET NAME	SHEET NUMBER
LINE DIAGRAM	PV-4

CEC 690.13(B) & 690.54
LOCATED AT PV SYSTEM DISCONNECT

PV SYSTEM AC DISCONNECT
RATED AC OUTPUT CURRENT: 52.35 AAC
NOMINAL OPERATING AC VOLTAGE: 240 VAC

CEC 690.13(B) & 706.15(C)
LOCATED AT PV SYSTEM DISCONNECT

WARNING

ELECTRICAL SHOCK HAZARD
TERMINALS ON THE LINE AND LOAD
SIDES MAY BE
ENERGIZED IN THE OPEN POSITION

CEC 690.56(C)(2)
LOCATED AT PV SYSTEM DISCONNECT

RAPID SHUTDOWN SWITCH FOR SOLAR PV SYSTEM

CEC 690.56(C)
LOCATED AT UTILITY METER

SOLAR PV SYSTEM IS EQUIPPED WITH RAPID SHUTDOWN

TURN RAPID SHUTDOWN SWITCH TO THE "OFF" POSITION TO SHUTDOWN PV SYSTEM AND REDUCE SHOCK HAZARD IN ARRAY

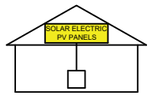

CEC 690.56(A) & (B), 705.10
LOCATED AT UTILITY METER

CAUTION: MULTIPLE SOURCES OF POWER

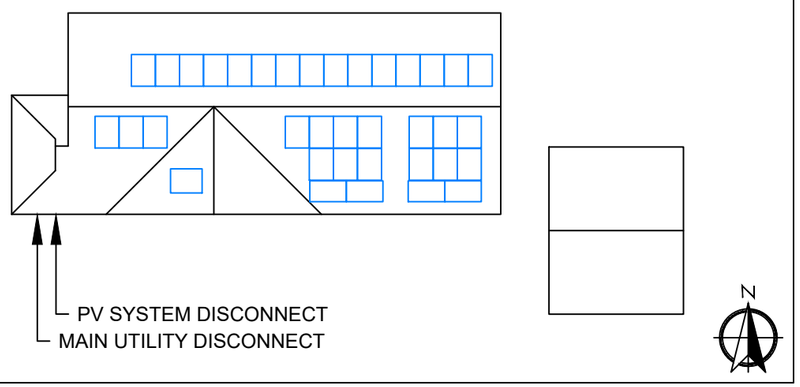

CEC 130.80(A)
LOCATED AT MAIN SERVICE PANEL

PCS SETTINGS

PCS CONTROL SETTING:	**160A**
DATE OF CALCULATION & SETTING:	**10/13/2026**
IDENTIFICATION OF LOADS & SOURCES MANAGED BY THE PCS:	**PANEL LIMIT**

CIRCUITS WITHIN THIS EQUIPMENT ARE CONTROLLED BY A POWER CONTROL SYSTEM. THE CONTROL SETTINGS SHALL ONLY BE CHANGED BY A QUALIFIED PERSON

RUACH ELECTRIC LLC
2537 N VILLAGE DR
SANTA ROSA,CA 95403

METER # - 1050157002

SCALE: NTS
DATE: 10/13/2026
DRAWN BY: RIGHT ANGLE ENGINEERING
FEDERATED INDIANS OF GRATON RANCHERIA
4528 LANGNER AVE
SANTA ROSA,CA 95407

SHEET NAME: ELECTRICAL LABELS
SHEET NUMBER: PV-5

Solstice® Panel

HALF-CELL 450W
SOLAR MODULE



High performance, half-cell N-Type mono-crystalline TOPCon 16BB 450W bifacial all-black modules produced using state of the art automated production lines and made using the highest quality materials and quality control standards.

HALF-CELL MONOCRYSTALLINE TYPE
• CTTC450HC12-08

FEATURES AND BENEFITS
High Quality / High Power
• 450W bifacial with transparent backsheet
• UL listed (61730-1, UL 61730-2)
• Positive power output tolerance

Limited Warranty*
• 25-year linear power output warranty

*See CertainTeed's limited warranty for details

POWER OUTPUT WARRANTY

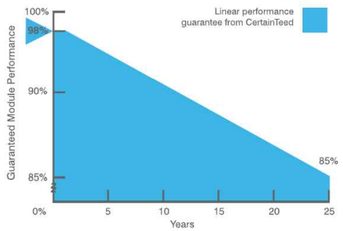

ELECTRICAL CHARACTERISTICS

Nominal Output (Pmpp)	W	450
Voltage at Pmax (Vmpp)	V	33.51
Current at Pmax (Impp)	A	13.44
Open Circuit Voltage (Voc)	V	38.84
Short Circuit Current (Isc)	A	14.47
Output Tolerance	W	0-+3%
No. of Cells & Connections		108 half-cells with 3 bypass diodes
Maximum Series Fuse Rating		30A
Cell Type		N-Type Monocrystalline TOPCon
Module Efficiency	%	23.02
Temperature Coefficient of Pmpp	%/C	-0.29
Temperature Coefficient of Voc	%/C	-0.25
Temperature Coefficient of Isc	%/C	+0.046
Bifaciality Ratio	%	80 +/- 5

MECHANICAL CHARACTERISTICS

Glass	Glass: 3.2 high transmission, tempered, anti-reflective
Frame	Anodized aluminum (Black)
Junction Box	IP68
Output Cables	4 mm2 (12AWG) PV Wire, Length 1.2m (47.2")
Connectors	Staubli MC4
Weight	46 +/- 2lbs (21 +/-1 kg)

OPERATING CONDITIONS

Dimensions	1724 x 1134 x 30 mm
Nominal Operating Cell Temperature	45 +/- 2° C
Operating Temperature	-40 to 85° C
Maximum System Voltage	1,500V
Fire Performance	Class C / Type 1
Maximum Wind Load	112 lbs/ft² (5400 Pa)
Maximum Snow Load	112 lbs/ft² (5400 Pa)

PACKAGING

Panels Per Pallet	37
Panels Per Container	962

DIMENSIONS

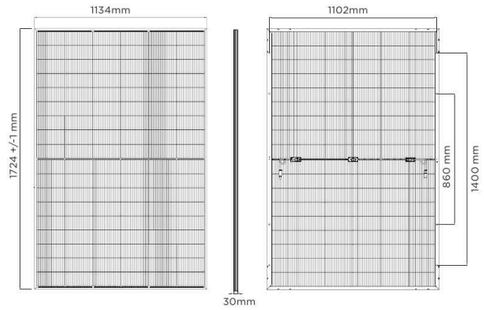

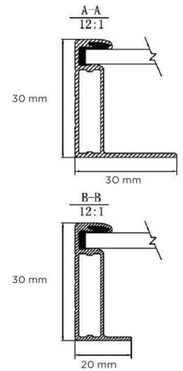

certainteed
SAINT-GOBAIN

SAINT-GOBAIN
CertainTeed
CEILINGS • GYPSUM • INSULATION • ROOFING • SIDING • TRIM
20 Moores Road, Malvern, PA 19355 800-233-8990 certainteed.com

©05/25 CertainTeed, Printed in the USA, Code No. 02-11-5266-US-EN

RUACH ELECTRIC LLC
RESIDENTIAL COMMERCIAL
CSLB# 1136770

RUACH ELECTRIC LLC
2537 N VILLAGE DR
SANTA ROSA,CA 95403

METER # - 1050157002

EQUIPMENT SPECIFICATION NOTES
1. ALL ELECTRICAL EQUIPMENT SHALL BE CERTIFIED ACCORDING TO AHJ AND NATIONAL REQUIREMENTS BY A NATIONALLY RECOGNIZED TESTING LABORATORY (NRTL).
2. FOR DOCUMENTATION SHOWING NRTL CERTIFICATION, SEE MANUFACTURER WEBSITE.
3. ALL EQUIPMENT SHALL BE INSTALLED ACCORDING TO MANUFACTURER INSTRUCTION.

SCALE: NTS
DATE: 10/13/2026
DRAWN BY: RIGHT ANGLE ENGINEERING
FEDERATED INDIANS OF GRATON RANCHERIA
4528 LANGNER AVE
SANTA ROSA,CA 95407

SHEET NAME
MFG. SPEC SHEETS

SHEET NUMBER
PV-6

ENPHASE.

NORTH AMERICA | DATA SHEET

IQ8AC Microinverter

Our newest IQ8 Series Microinverters[1, 2, 3] are the industry's first microgrid-forming[4], software-defined microinverters with split-phase power conversion capability to convert DC power to AC power efficiently.



Enphase 25 year limited warranty

UL CERTIFIED

Key specifications	IQ8AC-72-M-US @240 VAC	IQ8AC-72-M-US @208 VAC
Peak output power	366 VA	350 VA
Nominal grid voltage (L-L)	240 V split-phase (L-L), 180°	208 V single-phase (L-L), 120°
Nominal frequency	60 Hz	60 Hz
CEC weighted efficiency	97.0%	96.5%
Maximum input DC voltage	60 V	60 V
MPPT voltage range	28–45 V	28–45 V
Maximum module I_{sc}	20 A	20 A
Ambient temperature range	–40°C to 65°C (–40°F to 149°F)	

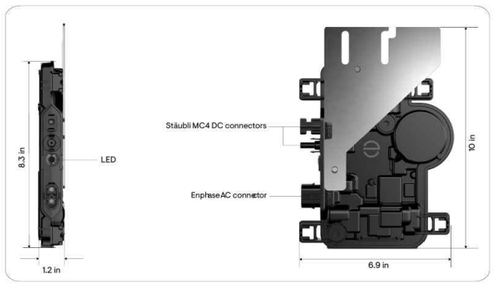

[1] IQ8 Series Microinverters can be added to existing IQ7 systems on the same IQ Gateway only in the following grid-tied configurations: Solar Only or Solar + Battery (IQ Battery 3T/10T and IQ Battery 5P) without backup.
[2] IQ7 Series Microinverters cannot be added to a site with existing IQ8 Series Microinverters on the same gateway. Mixed system of IQ7 and IQ8 will not support IQ8-specific PCS features and grid-forming capabilities.
[3] IQ Microinverters ship with default settings that meet North America's IEEE 1547 interconnection standard requirements. Region-specific adjustments may be requested by an Authority Having Jurisdiction (AHJ) or utility representative, according to the IEEE 1547 interconnection standard. Use an IQ Gateway to make these changes during installation.
[4] Meets UL 1741 only when installed with IQ System Controller 2 or 3.

© 2024 Enphase Energy. All rights reserved. Enphase, the e and CC logos, IQ, and certain other marks listed at https://enphase.com/trademark-usage-guidelines are trademarks of Enphase Energy, Inc. in the U.S. and other countries. Data subject to change.

DSH-00046-5.0-EN-2024-12-10

Simple

- Lightweight and compact with plug-and-play connectors
- Power line communication (PLC) between components
- Faster installation with simple two-wire cabling

Reliable

- Produces power even when the grid is down[4]
- More than one million cumulative hours of testing
- Industry-leading limited warranty of up to 25 years
- Class II double-insulated enclosure
- Optimized for the latest high-powered PV modules

Microgrid-forming

- Complies with the latest advanced grid support
- Remote automatic updates for the latest grid requirements
- Configurable to support a wide range of grid profiles
- Meets CA Rule 21 (UL 1741-SA) and IEEE 1547:2018 (UL 1741-SB 3rd Ed.)

Input data (DC)	Units	IQ8AC-72-M-US
Commonly used module pairings[5]	W	295–500
Module compatibility	–	To meet compatibility, PV modules must be within the following maximum input DC voltage and maximum module I_{sc}. Module compatibility can be checked at https://enphase.com/installers/microinverters/calculator.
MPPT voltage range	V	28–45
Operating range	V	18–58
Minimum/Maximum start voltage	V	22/58
Maximum input DC voltage	V	60
Maximum continuous input DC current	A	14
Maximum input DC short-circuit current	A	25
Maximum module I_{sc}	A	20
Overvoltage class DC port	–	II
DC port backfeed current	mA	0
PV array configuration	–	Ungrounded array; no additional DC side protection required; AC side protection requires a maximum of 20 A per branch circuit

Output data (AC)	Units	IQ8AC-72-M-US @240 VAC	IQ8AC-72-M-US @208 VAC
Peak output power	VA	366	350
Maximum continuous output power	VA	349	345
Nominal grid voltage (L-L)	V	240, split-phase (L-L), 180°	208,single-phase (L-L), 120°
Minimum and maximum grid voltage[6]	V	211–264	183-229
Maximum continuous output current	A	1.45	1.66
Nominal frequency	Hz	60	
Extended frequency range	Hz	47–68	
AC short-circuit fault current over three cycles	A_{rms}	2.70	
Maximum units per 20 A (L-L) branch circuit [7]	–	11	9
Total harmonic distortion	%	<5	
Overvoltage class AC port	–	III	
AC port backfeed current	mA	18	
Power factor setting	–	1.0	
Grid-tied power factor (adjustable)	–	0.85 leading ... 0.85 lagging	
Peak efficiency	%	97.3	97.2
CEC weighted efficiency	%	97.0	96.5
Nighttime power consumption	mW	30	22

Mechanical data	IQ8AC-72-M-US
Ambient temperature range	–40°C to 65°C (–40°F to 149°F)
Relative humidity range	4% to 100% (condensing)
DC connector type	Stäubli MC4

[5] No enforced DC/AC ratio.
[6] Nominal voltage range can be extended beyond nominal if required by the utility.
[7] Limits may vary. Refer to local requirements to define the number of microinverters per branch in your area.

DSH-00046-5.0-EN-2024-12-10

RUACH ELECTRIC LLC
2537 N VILLAGE DR
SANTA ROSA,CA 95403

METER # - 1050157002

EQUIPMENT SPECIFICATION NOTES

1. ALL ELECTRICAL EQUIPMENT SHALL BE CERTIFIED ACCORDING TO AHJ AND NATIONAL REQUIREMENTS BY A NATIONALLY RECOGNIZED TESTING LABORATORY (NRTL).
2. FOR DOCUMENTATION SHOWING NRTL CERTIFICATION, SEE MANUFACTURER WEBSITE.
3. ALL EQUIPMENT SHALL BE INSTALLED ACCORDING TO MANUFACTURER INSTRUCTION.

SCALE: NTS | DATE: 10/13/2026

DRAWN BY: RIGHT ANGLE ENGINEERING

FEDERATED INDIANS OF GRATON RANCHERIA
4528 LANGNER AVE
SANTA ROSA,CA 95407

SHEET NAME: MFG. SPEC SHEETS

SHEET NUMBER: PV-7

Tech Brief

IRONRIDGE

XR Rail® Family

Solar Is Not Always Sunny

Over their lifetime, solar panels experience countless extreme weather events. Not just the worst storms in years, but the worst storms in 40 years. High winds capable of ripping panels from a roof, and snowfalls weighing enough to buckle a panel frame.

XR Rails® are the structural backbone preventing these results. They resist uplift, protect against buckling and safely and efficiently transfer loads into the building structure. Their superior spanning capability requires fewer roof attachments, reducing the number of roof penetrations and the amount of installation time.

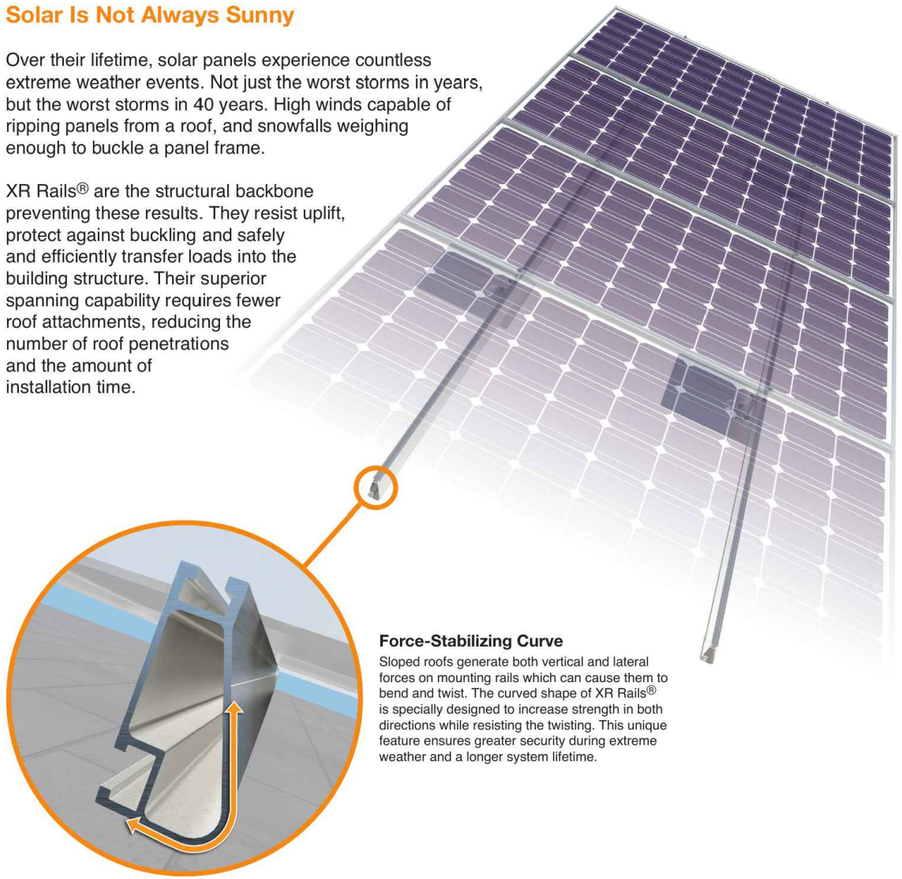

Force-Stabilizing Curve

Sloped roofs generate both vertical and lateral forces on mounting rails which can cause them to bend and twist. The curved shape of XR Rails® is specially designed to increase strength in both directions while resisting the twisting. This unique feature ensures greater security during extreme weather and a longer system lifetime.

Compatible with Flat & Pitched Roofs

XR Rails® are compatible with FlashFoot® and other pitched roof attachments.

IronRidge® offers a range of tilt leg options for flat roof mounting applications.

Corrosion-Resistant Materials

All XR Rails® are made of 6000-series aluminum alloy, then protected with an anodized finish. Anodizing prevents surface and structural corrosion, while also providing a more attractive appearance.



Cut Sheet

IRONRIDGE

XR100® Rail

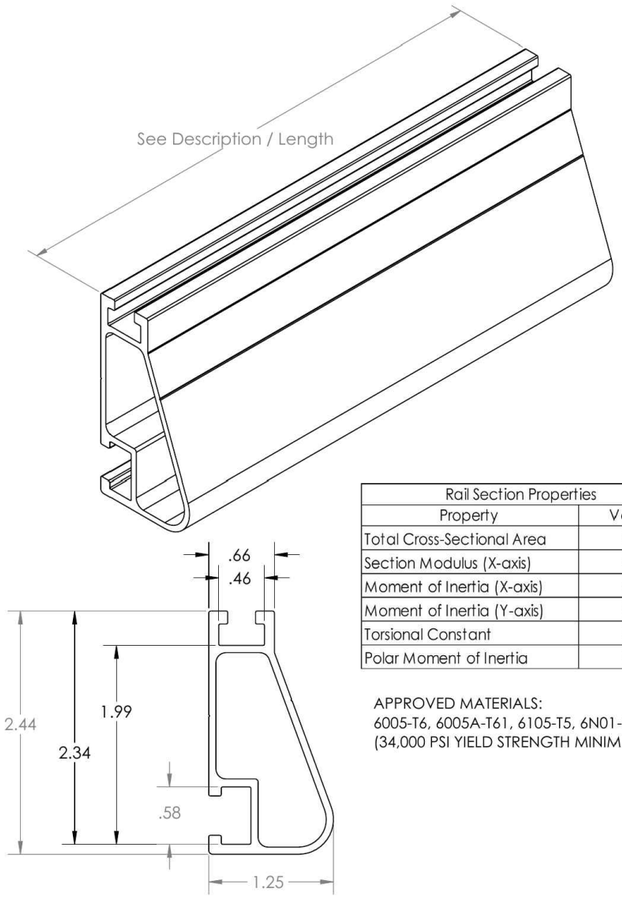

Rail Section Properties	
Property	Value
Total Cross-Sectional Area	0.582 in^2
Section Modulus (X-axis)	0.297 in^3
Moment of Inertia (X-axis)	0.390 in^4
Moment of Inertia (Y-axis)	0.085 in^4
Torsional Constant	0.214 in^3
Polar Moment of Inertia	0.126 in^4

APPROVED MATERIALS:
6005-T6, 6005A-T61, 6105-T5, 6N01-T6
(34,000 PSI YIELD STRENGTH MINIMUM)

Clear Part Number	Black Part Number	Description / Length	Material	Weight
XR-100-132A	XR-100-132B	XR100, Rail 132" (11 Feet)	6000-Series Aluminum	7.50 lbs.
XR-100-168A	XR-100-168B	XR100, Rail 168" (14 Feet)		9.55 lbs.
XR-100-204A	XR-100-204B	XR100, Rail 204" (17 Feet)		11.60 lbs.

v1.11

RUACH ELECTRIC LLC
2537 N VILLAGE DR
SANTA ROSA,CA 95403

METER # - 1050157002

EQUIPMENT SPECIFICATION NOTES

1. ALL ELECTRICAL EQUIPMENT SHALL BE CERTIFIED ACCORDING TO AHJ AND NATIONAL REQUIREMENTS BY A NATIONALLY RECOGNIZED TESTING LABORATORY (NRTL).
2. FOR DOCUMENTATION SHOWING NRTL CERTIFICATION, SEE MANUFACTURER WEBSITE.
3. ALL EQUIPMENT SHALL BE INSTALLED ACCORDING TO MANUFACTURER INSTRUCTION.

SCALE: NTS | DATE: 10/13/2026

DRAWN BY: RIGHT ANGLE ENGINEERING

FEDERATED INDIANS OF GRATON RANCHERIA
4528 LANGNER AVE
SANTA ROSA,CA 95407

SHEET NAME
MFG. SPEC SHEETS

SHEET NUMBER
PV-11

Cut Sheet

IRONRIDGE

FlashFoot2

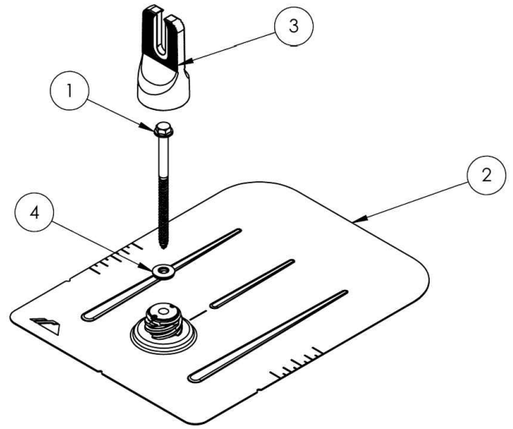

ITEM NO.	DESCRIPTION	Qty in Kit
1	BOLT LAG 5/16 X 4.75"	4
2	ASSY, FLASHING	4
3	ASSY, CAPFOOT	4
4	WASHER, EPDM BACKED	4

FLASHFOOT2

Part Number	Description
FM-FF2-001	Kit, 4pcs, FlashFoot2 (Mill)
FM-FF2-001-B	Kit, 4pcs, FlashFoot2 (Black)

1) Bolt, Lag 5/16 x 4.75

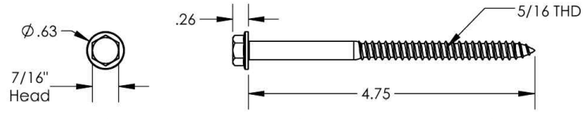

Property	Value
Material	300 Series Stainless Steel
Finish	Clear

v1.0

Cut Sheet

2) Assy, Flashing

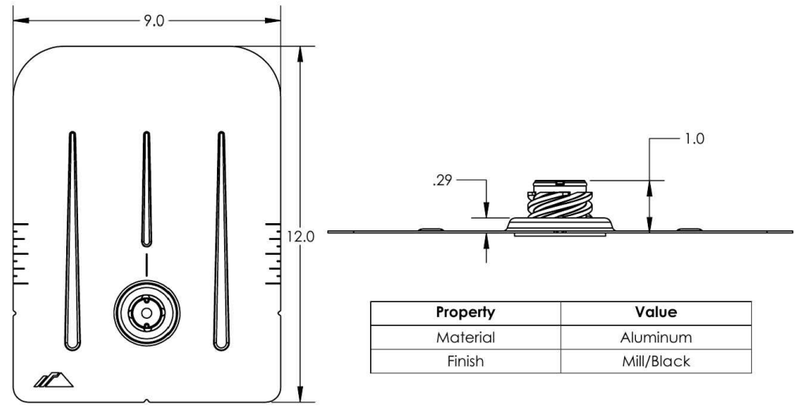

Property	Value
Material	Aluminum
Finish	Mill/Black

3) Assy, Capfoot

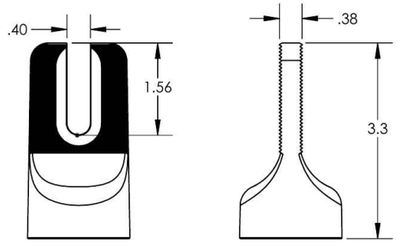

Property	Value
Material	Aluminum
Finish	Mill/Black

4) Washer, EPDM Backed

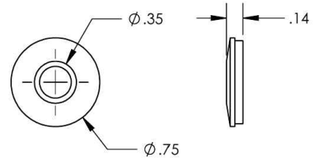

Property	Value
Material	300 Series Stainless Steel
Finish	Clear

v1.0

RUACH ELECTRIC LLC
2537 N VILLAGE DR
SANTA ROSA,CA 95403

METER # - 1050157002

EQUIPMENT SPECIFICATION NOTES

1. ALL ELECTRICAL EQUIPMENT SHALL BE CERTIFIED ACCORDING TO AHJ AND NATIONAL REQUIREMENTS BY A NATIONALLY RECOGNIZED TESTING LABORATORY (NRTL).
2. FOR DOCUMENTATION SHOWING NRTL CERTIFICATION, SEE MANUFACTURER WEBSITE.
3. ALL EQUIPMENT SHALL BE INSTALLED ACCORDING TO MANUFACTURER INSTRUCTION.

SCALE: NTS | DATE: 10/13/2026

DRAWN BY: RIGHT ANGLE ENGINEERING

FEDERATED INDIANS OF GRATON RANCHERIA
4528 LANGNER AVE
SANTA ROSA,CA 95407

SHEET NAME
MFG. SPEC SHEETS

SHEET NUMBER
PV-12

Tech Brief

IRONRIDGE

XR Rail® Family

Solar Is Not Always Sunny

Over their lifetime, solar panels experience countless extreme weather events. Not just the worst storms in years, but the worst storms in 40 years. High winds capable of ripping panels from a roof, and snowfalls weighing enough to buckle a panel frame.

XR Rails® are the structural backbone preventing these results. They resist uplift, protect against buckling and safely and efficiently transfer loads into the building structure. Their superior spanning capability requires fewer roof attachments, reducing the number of roof penetrations and the amount of installation time.

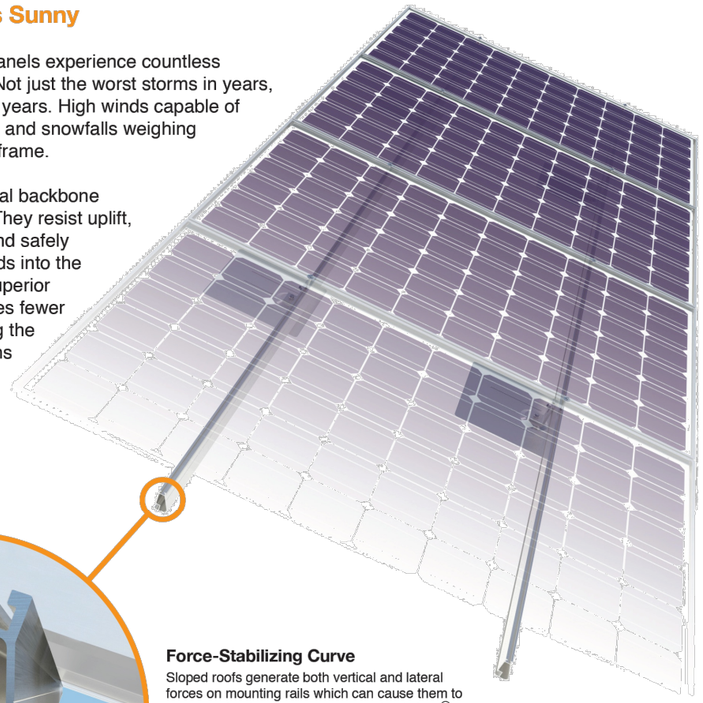

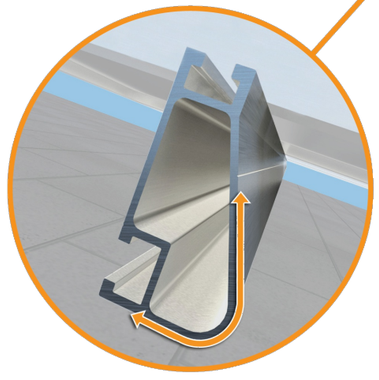

Force-Stabilizing Curve

Sloped roofs generate both vertical and lateral forces on mounting rails which can cause them to bend and twist. The curved shape of XR Rails® is specially designed to increase strength in both directions while resisting the twisting. This unique feature ensures greater security during extreme weather and a longer system lifetime.

Compatible with Flat & Pitched Roofs

XR Rails® are compatible with FlashFoot® and other pitched roof attachments.

IronRidge® offers a range of tilt leg options for flat roof mounting applications.

Corrosion-Resistant Materials

All XR Rails® are made of 6000-series aluminum alloy, then protected with an anodized finish. Anodizing prevents surface and structural corrosion, while also providing a more attractive appearance.

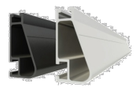

Cut Sheet

IRONRIDGE

XR1000® Rail

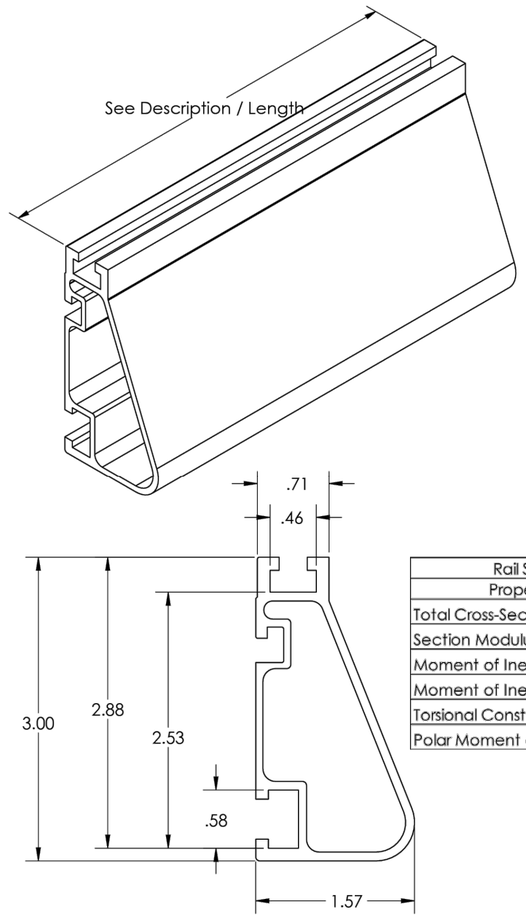

Rail Section Properties	
Property	Value
Total Cross-Sectional Area	0.807 in^2
Section Modulus (X-axis)	0.530 in^3
Moment of Inertia (X-axis)	0.843 in^4
Moment of Inertia (Y-axis)	0.182 in^4
Torsional Constant	0.436 in^3
Polar Moment of Inertia	0.330 in^4

Clear Part Number	Black Part Number	Description / Length	Material	Weight
XR-1000-132A	XR-1000-132B	XR1000, Rail 132" (11 Feet)	6000-Series Aluminum	10.97 lbs.
XR-1000-168A	XR-1000-168B	XR1000, Rail 168" (14 Feet)		13.96 lbs.
XR-1000-204A	XR-1000-204B	XR1000, Rail 204" (17 Feet)		16.95 lbs.

v1.0

RUACH ELECTRIC LLC
2537 N VILLAGE DR
SANTA ROSA,CA 95403

METER # - 1050157002

EQUIPMENT SPECIFICATION NOTES

1. ALL ELECTRICAL EQUIPMENT SHALL BE CERTIFIED ACCORDING TO AHJ AND NATIONAL REQUIREMENTS BY A NATIONALLY RECOGNIZED TESTING LABORATORY (NRTL).
2. FOR DOCUMENTATION SHOWING NRTL CERTIFICATION, SEE MANUFACTURER WEBSITE.
3. ALL EQUIPMENT SHALL BE INSTALLED ACCORDING TO MANUFACTURER INSTRUCTION.

SCALE: NTS

DATE: 10/13/2026

DRAWN BY: RIGHT ANGLE ENGINEERING

FEDERATED INDIANS OF GRATON RANCHERIA
4528 LANGNER AVE
SANTA ROSA,CA 95407

SHEET NAME
MFG. SPEC SHEETS

SHEET NUMBER
PV-13